PNEUMATIC 90° ACTUATOR

AT1001U

Double acting & spring return · 90°

T.D.S. AT1001U-DM · issued 10/09

Air Torque AT1001U pneumatic 90° actuator, offered double acting (D) or spring return (S). Full output torque, dimensions and ISO 5211 mounting data from Air Torque T.D.S. AT1001U-DM.

- Double acting (D) and spring return (S) versions
- 8 spring sets, S 05 to S 12
- ISO 5211 F16 + F25 + F30 standard; F30 optional
- Pressure connection G1/2", ports 2 and 4
- ST, HT and LLT temperature range options

• 0° – 90° ROTATION

• ISO 5211 F16 + F25 + F30

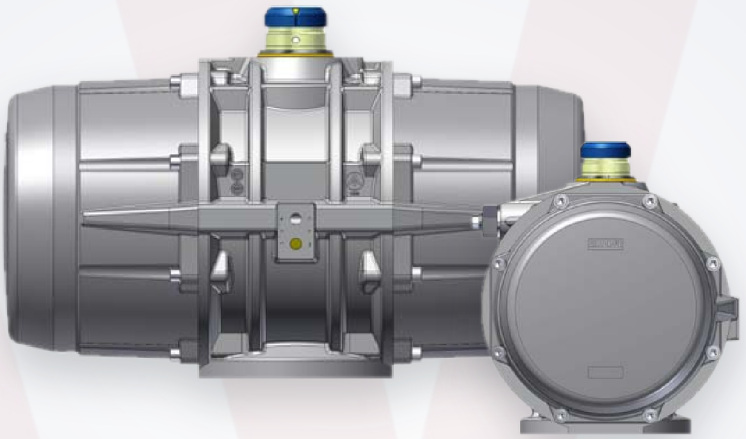

• ANCILLARY AA 5

7 / 8 bar	10007 Nm	170 kg	950 mm
MAX. PRESSURE D / S	DA TORQUE AT 6 BAR	WEIGHT D, AL. SHAFT	OVERALL LENGTH

Output torque.

NM AT SUPPLY PRESSURE

DOUBLE ACTING (D)

Pressure	2.5 bar	3 bar	3.5 bar	4 bar	4.2 bar	4.5 bar	5 bar	5.5 bar	6 bar	7 bar	8 bar	Approx. weight (kg) Al. drive shaft (C)
D	**4169**	**5003**	**5837**	**6671**	**7005**	**7505**	**8339**	**9173**	**10007**	**11674**	**13342**	**170**

SPRING RETURN (S)

air stroke 0° → 90° · spring stroke 90° → 0°

Spring set	2.5 bar		3 bar		3.5 bar		4 bar		4.2 bar		4.5 bar		5 bar		5.5 bar		6 bar		7 bar		8 bar		Spring stroke		Approx. weight (kg) Al. drive shaft (C)
	Start	End	Start	End	Start	End	Start	End	Start	End	Start	End	Start	End	Start	End	Start	End	Start	End	Start	End	Start	End	
S 05	**2474**	**1695**	3308	2529	4142	3362	4976	4196	5310	4530	5810	5030	6644	5864									**2475**	**1695**	**199**
S 06	2135	1200	**2969**	**2034**	3803	2867	4637	3701	4971	4035	5471	4535	6305	5369	7139	6203							**2970**	**2034**	**204**
S 07			2630	1539	**3464**	**2373**	4298	3206	4632	3540	5132	4040	5966	4874	6800	5708	7633	6542					**3465**	**2373**	**210**
S 08					3125	1878	**3959**	**2711**	**4292**	**3045**	4793	3545	5627	4379	6461	5213	7294	6047	8962	7715			**3960**	**2712**	**216**
S 09							3620	2217	3953	2550	**4454**	**3050**	5288	3884	6122	4718	6955	5552	8623	7220	10291	8887	**4455**	**3051**	**221**
S 10											4115	2555	**4949**	**3389**	5783	4223	6616	5057	8284	6725	9952	8393	**4949**	**3390**	**227**
S 11													4610	2894	**5444**	**3728**	6277	4562	7945	6230	9613	7898	**5444**	**3729**	**233**
S 12															5105	3233	**5938**	**4067**	7606	5735	9274	7403	**5939**	**4068**	**238**

Max. pressure for D is stated as 7 bar on the sheet; the 8 bar DA value is shown as printed by Air Torque. Highlighted figures are shown in bold on the Air Torque data sheet. Blank cells: no value given by Air Torque for that spring set and pressure.

DIMENSIONS

Drawing (mm)

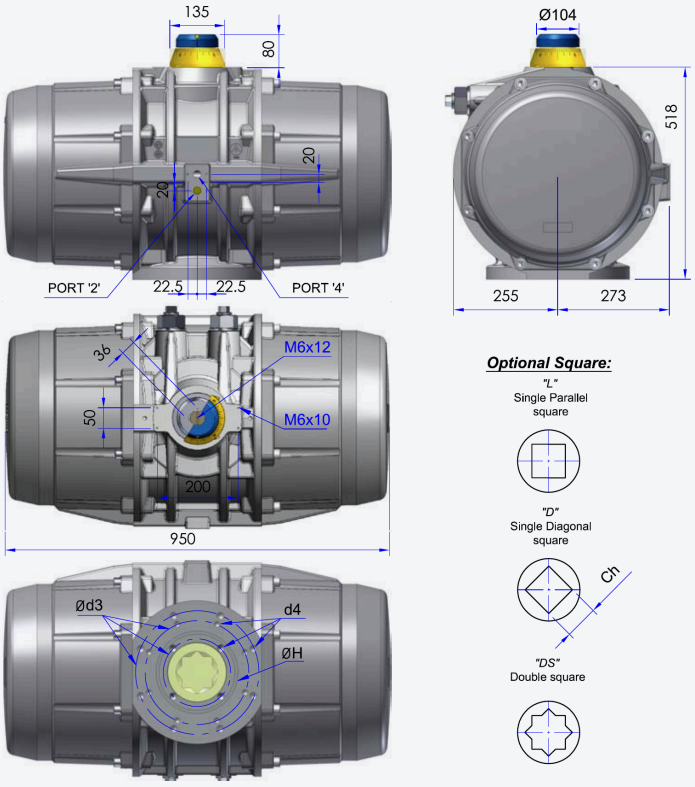

ISO 5211 FLANGE DIMENSIONS

	STD	Optional
ISO 5211	**F16 + F25 + F30**	**F30**
Ø d2	200 (F25)	230
Ø d3	298	298
Ø d3 A	254	NA
Ø d3 B	165	NA
d4	M20x30	M20x30
d4 A	M16x24	NA
d4 B	M20x30	NA
Ø H	200	NA
Ch x l min. – D	75x77	
Ch x l min. – DS	55x59 – 75x80	
h min.	2.5	2.5
h1	4	2

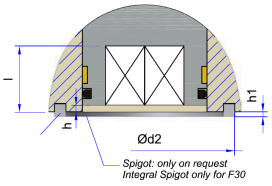

Spigot detail

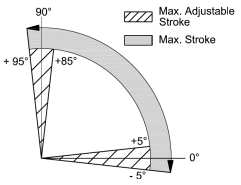

Rotation & stroke adjustment

Technical data.

AT1001U · T.D.S. AT1001U-DM

Max. pressure	D = 7 bar · S = 8 bar
Rotation (standard)	0° – 90°
Stroke adjustment	For 1° adjustment, 1/6 turn
Chamber Ø	420 mm
Air volume	Opening 49 L · closing 84 L
Moving time (A)	D: opening 8 s · closing 9 s S: opening 10 s · closing 11 s

Pressure connection	Ports 2 and 4 · G1/2"
Ancillary attachment	AA 5 (standard) AA 4 – only on request with additional adapter plate
Temperature (B)	ST (standard): -40 to +80 °C HT (high temperature): -15 to +150 °C LLT (extreme low temperature): -55 to +80 °C
Operating medium	Free of dust and oil – see note below

Operating medium. The operating medium must be free of dust and oil. Maximum particle size 30 µm (ISO 8573 Part 1, Class 5). To prevent water condensation and/or solidification (ice when the actuator works below 0 °C), the operating medium must have a dew point equal to -20 °C or at least 10 °C below the ambient temperature (ISO 8573 Part 1, Class 3).

A) The moving times above were obtained under the following test conditions: (1) room temperature, (2) actuator stroke 90°, (3) solenoid valve with 11 mm orifice and flow capacity Qn 6000 L/min, (4) inside pipe diameter 11 mm, (5) medium clean air, (6) air supply pressure 5.5 bar (79.75 psi), (7) actuator without external resistance load. In field applications where one or more of these parameters differ, the moving time will be different.

B) Every temperature range option requires proper components and lubricant. See Air Torque technical data sheet T.D.S. U00501E.

C) For actuator with stainless steel pinion add 31 kg approximate weight.

Data supplied by Air Torque S.p.A. and provided for reference only. Specifications may change without notice – please confirm details with Actuation Valve & Control before ordering.

AV®
Sizing an Air Torque actuator?
Talk to our UK team about torque sizing, spring sets, mounting kits and complete actuated valve packages.
actuation.co.uk